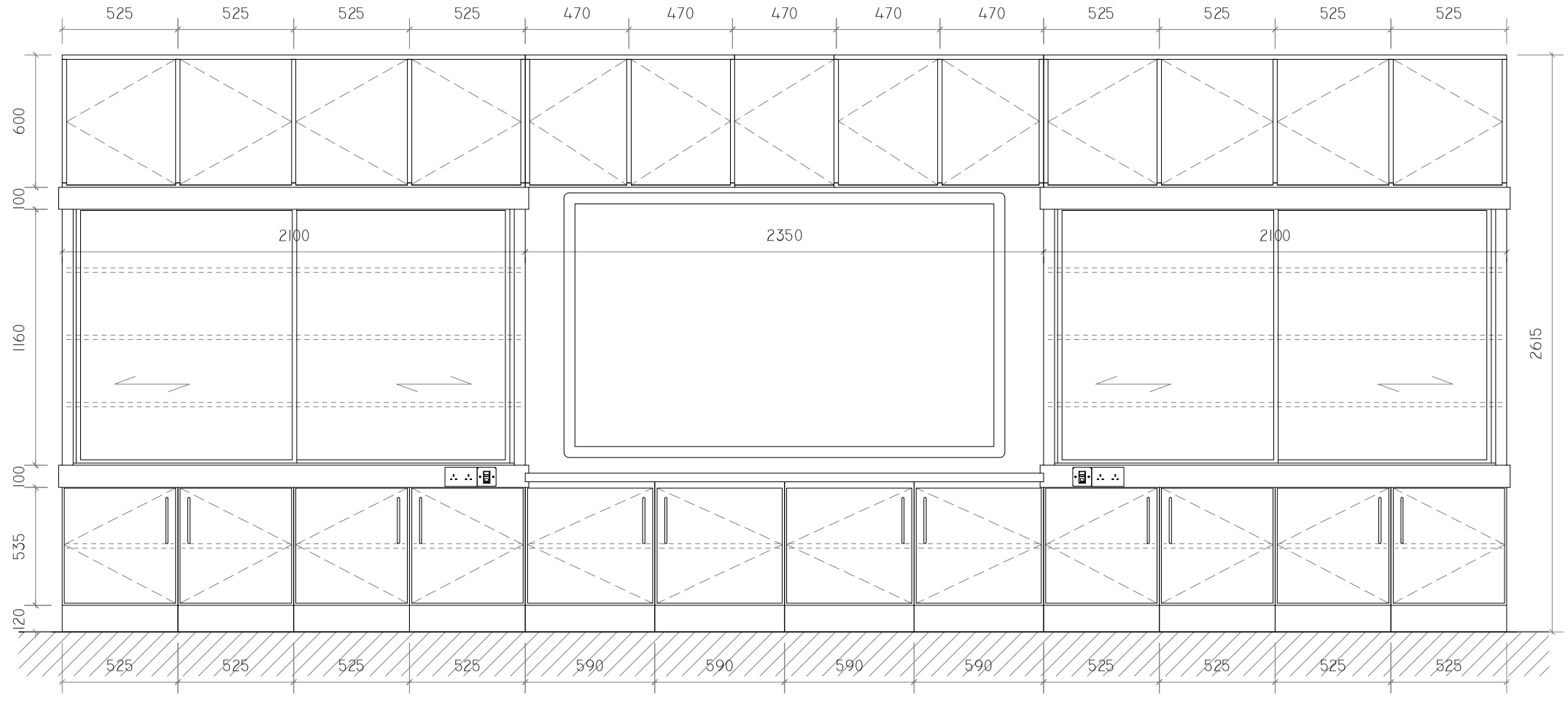

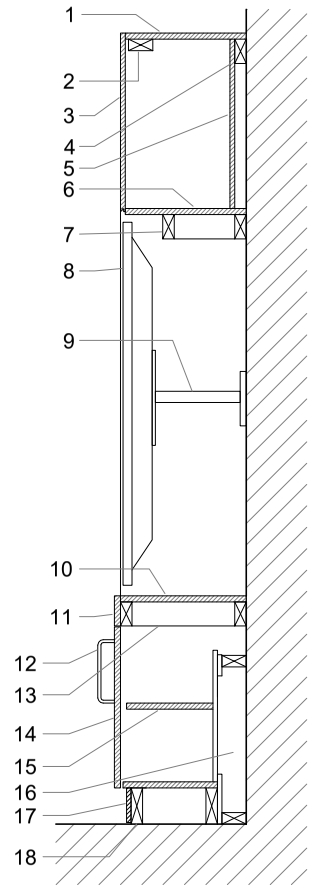

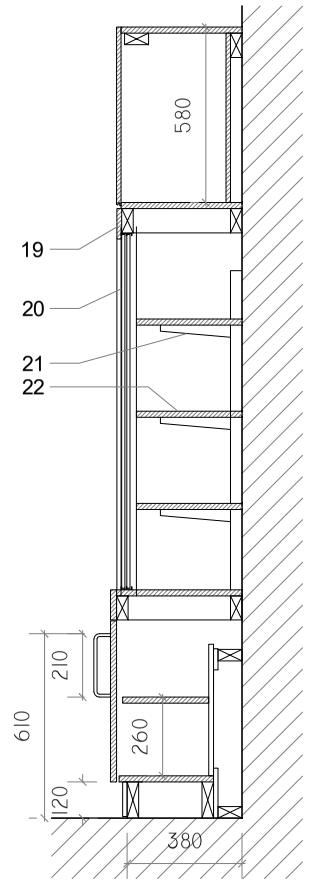

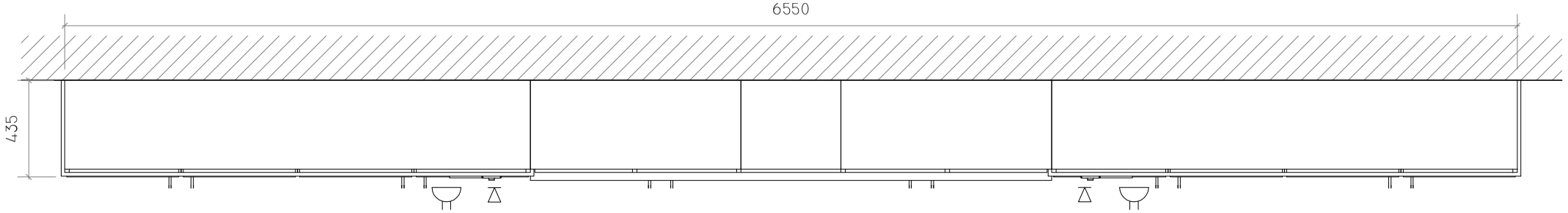

1. 20mm MDF top panel, painted or laminated (faces and edges).
2. Softwood framing rail.
3. 20mm MDF door, painted or laminated (faces and edges), on high quality steel hinges. finger pull slot profile to the bottom edge.
4. Softwood bearer.
5. 15mm MDF backing panel, painted.
6. 20mm MDF bottom panel, painted or laminated (faces and edges).
7. Softwood bearer.
8. Interactive T.V. or projector. The surface of the screen must be flush with front face of unit.
9. T.V. metal bracket, fixed to wall.
10. 20mm MDF top panel, painted or laminated (faces and edges).
11. 15mm MDF facing panel, painted or laminated (faces and edges).
12. 210mm long, 20mm Dia. stainless steel pull handle.
13. Softwood supporting bearers.
14. 20mm MDF door, painted or laminated (faces and edges), on high quality steel hinges, with high quality cylinder lock on master key system.
15. 20mm MDF shelf, painted or laminated (faces and edges), on adjustable studs.
16. Gap at back of unit to allow for service drops.
17. 15mm hardwood plinth, 120mm high (should match height of skirting).
18. Softwood bearer.
19. 15mm MDF facing panel, painted or laminated (faces and edges).
20. Aluminum sliding door faced with white-board or notice board material (selected in consultation with the school) on heavy duty high quality sliding rail system, fitted with locking device, and rubber finger protectors.
21. Heavy duty, high quality adjustable shelving system.
22. 20mm MDF shelf, painted or laminated (faces and edges).

1 TEACHING WALL UNIT (F.12)
1:25

DOCUMENTS FROM ***"DEPARTMENT OF EDUCATION & SKILLS"***

USE OF THIS DRAWING:
do not scale from this drawing, use written dimention only. all dimentions and details to be checked on site by the contractor. all architects drawings, details and specifications to be cross referenced with other consultants information. all discrepancies to be brought to the attention of the architect immediately. this drawing is not suitable for construction purposes unless clearly indicated. this drawing, and any digtial version, remains the copyright of paul dillon architects. only when the appropriate fee is paid to paul dillon architects is a licence to use a hard copy of this drawing in order to produce one orignal work, granted. this drawing can not be reproduced without this licence. this licence can only be transfered on the expressed written consent of paul dillon architects. any digital information on this drawing can only be used were paul dillon architects are the design team leaders.

revision:	description:	by:	date:
A	PRE-TENDER	EV	03.06.26

paul dillon architects
[redacted]
Maam Valley Connemara County Galway Ireland
Tel. 00353 (0)87 6786244 info@pauldillonarchitects.com
Fax. 00353 (0)94 9548768 www.pauldillonarchitects.com

project:	ST TIERNANS CS, PARKVALE, BALALLY, DUBLIN
client:	BOARD OF MANAGEMENT ST TIERNANS CS
dwg title:	FIXED FURNITTURES DETAIL 1
scale on A3: 1:25	started: FEB 26 · by: PD · dwg no: 144.23 · rev: A